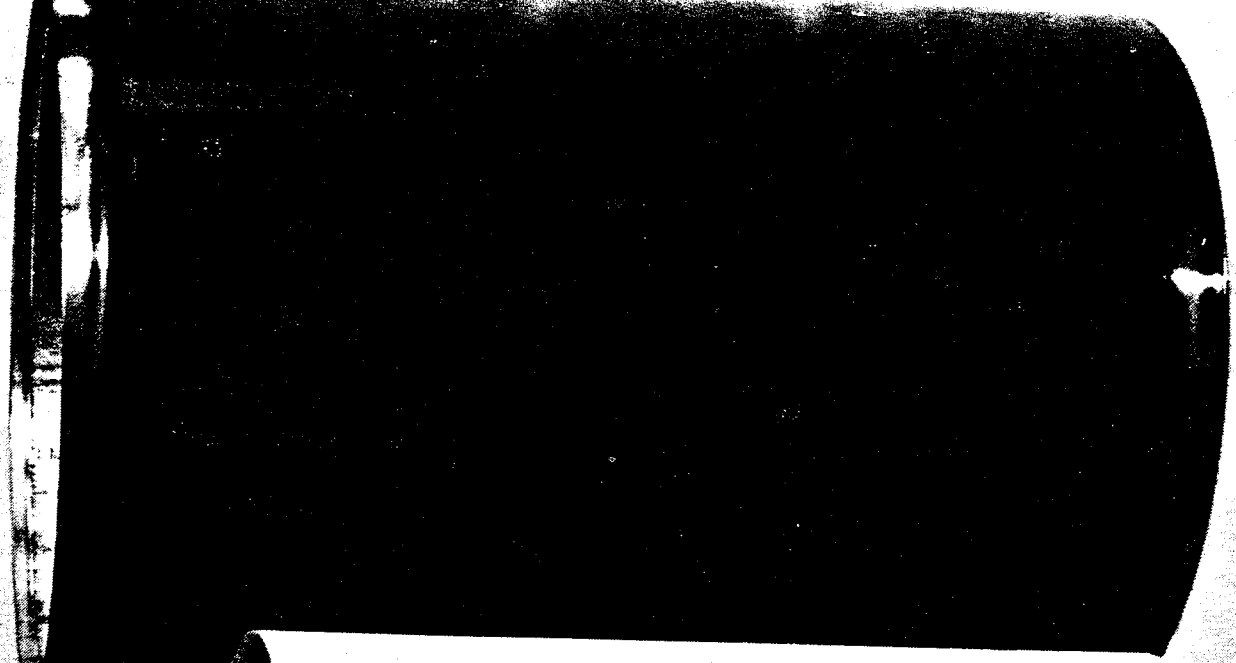

THE ART of XEROGRAPHY

Xerography, the laboratory curiosity reported by Electronics World (then Radio News) in 1944, has been instrumental in creating a giant new industry with sales in the hundreds of millions of dollars. The primary growth has been in office copiers, but xerographic principles and processes are finding new and broader electronic applications. This article up-dates the original.

By CHRISTOPHER M. CELENT / Research & Engineering, Xerox Corporation

ON October 22, 1938, a young physicist and patent attorney, Chester F. Carlson, wrote "10,-22,-38 Astoria" on a piece of glass. Then, working in a darkened room with another physicist as a laboratory assistant, they rubbed a sulfur-coated metal plate with a handkerchief and quickly exposed the plate to light transmitted through the glass. Next, they sprinkled the plate with dyed lycopodium powder, blew lightly over it, and pressed a sheet of waxed paper to the paper surface. When the paper was pulled free of the plate, the date and location were reproduced, and xerography (Carlson called it "electrophotography") was born.

Carlson patented his invention and then set out to find some company to refine and develop it. He knocked on the doors of some 20 to 30 companies without success. But he persisted, and in 1944 succeeded in interesting scientists at Battelle Memorial Institute. Battelle, a research organization located in Columbus, Ohio, agreed to study the process.

In July, 1944, RADIO NEWS magazine (now ELECTRONICS WORLD) heard about the invention and published a technical analysis. A year later, Dr. John H. Dessauer, the research director of a small company in Rochester, N.Y., read an abstract of the article, then obtained and read the original article. Intrigued, he arranged for the president of his company, Joseph C. Wilson, to visit Battelle.

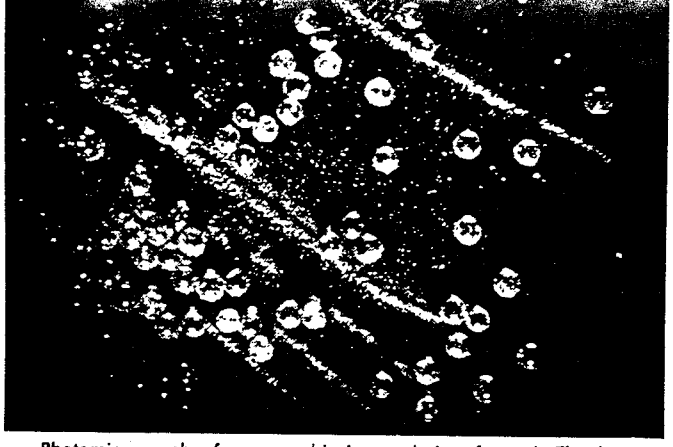

Photomicrograph of xerographic image being formed. The large positively charged carrier beads transport negatively charged toner particles to the positively charged selenium-coated plate. The carrier beads are 100-200 times larger than toner particles. (The dry developer powder is a special formulation of small glass or sand carrier beads plus particles of black heat-fusible carbon.)

Wilson was the president of *The Haloid Company*, then a small, moderately successful sensitizer of photographic and photocopy paper and manufacturer of photocopying machines. Wilson saw promise in the new idea and sponsored further research both at Battelle and within his own company. In 1947, *Haloid* obtained partial rights to the process and launched an intensive development program.

Thus the seeds of invention were sown, germinated, and nurtured. They were to bloom in little more than a decade into a revolution in business office practices and to catapult the little *Haloid Company*—renamed *Haloid-Xerox*, later *Xerox Corporation*—into the ranks of the five hundred largest corporations in the United States.

Why Xerography?

Chester Carlson's invention of xerography was no sudden flash of genius nor was it an accidental discovery. When he "discovered" it he was seeking the solution to a specific problem. Mr. Carlson in 1935 was working in the patent department of *P. R. Mallory and Company* (and going to law school at night) and never seemed to have enough carbon copies of patent specifications.

He could have found a copying machine in 1935, of course. There were, for example, the Rectigraph machine (made, incidentally, by *Haloid*), blue-printing machines, machines using the photographic processes, and others. But there were serious deficiencies in the copies made by these machines and in the way these copies were produced.

The time it took to get a copy is a good example of the problems he faced. It took about 30 minutes for each copy made and the machines of that day were so complicated that it took special training to operate them as well as special locations for the machines.

The process most likely involved handling "messy" chemicals which gave off offensive odors. Other objections were that the copy was often faint, hard-to-read, and not very permanent, or printed on hard-to-handle or flimsy paper. Other machines required specially prepared masters.

There were other reasons why copy was unsatisfactory. For example, some machines would not copy certain colors. When the ball-point pen came into general use, it was discovered that many of the machines would not copy it. Or, the copy came out as white-on-black, white-on-blue, or in some other-than-usual color combination. Then, too, only single sheets could be copied—often at some risk that the original would be destroyed.

It is interesting to note that some of these faults were not really objectionable back in 1935. As a matter of fact, most people then would have been satisfied with almost any kinds of copies that would last, were legible, and could be made quickly and cheaply. But the requirements of the customer became refined and he demanded better copiers.

How Does It Work?

Xerography is an electrostatic copying process. It makes use of the basic principle of static electricity; objects having opposite electrical charges (positive and negative) attract and objects having the same charge (both positive or negative) repel.

There are two commonly used xerographic copying techniques employing electrostatic principles. One technique uses a re-usable plate or drum coated with a photoconductor, usually selenium. The second technique uses paper specially coated with a photoconductor such as a zinc oxide mixture. Such precoated papers are not re-usable.

Laboratory test method to determine charge of individual toner particles in xerographic developer. Powdered developer is placed in particle generator at bottom. A loudspeaker vibrates the mix, randomly freeing charged particles. Some of the particles are eventually drawn in a flow system through a capillary and a drift-tube detector. The detector picks up a voltage proportional to the particle charge. This voltage, indicating charge and velocity, is amplified and displayed on oscilloscope.

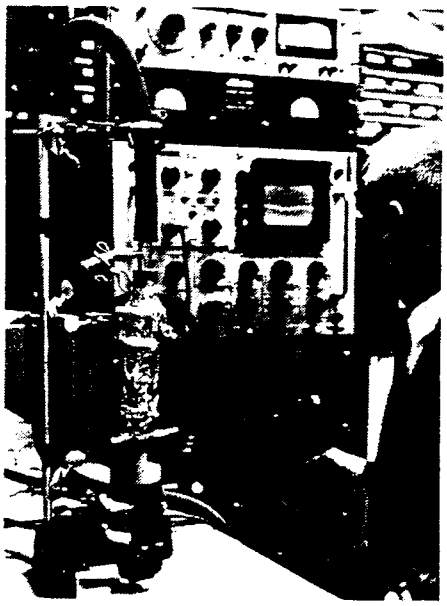

Fig. 1. The five basic steps in the xerographic process are illustrated here.

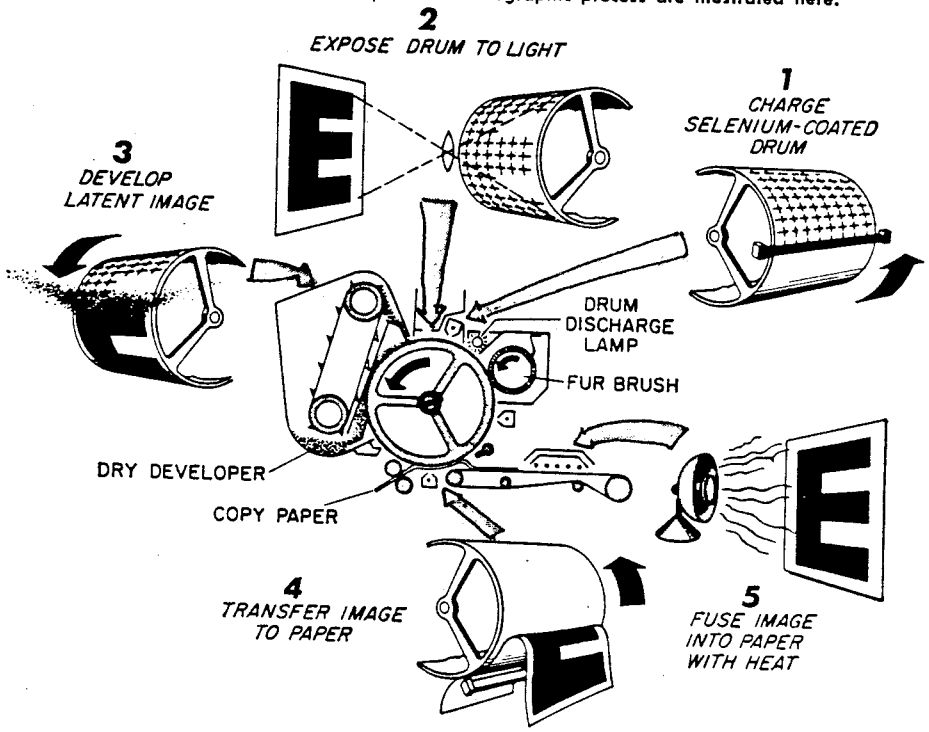

Each of these xerographic techniques has been used successfully in document-copying machines. Systems based on re-usable drums employ the "transfer electrostatic process." The precoated paper systems use the "direct electrostatic process." References to xerography in the remainder of this article pertain mainly to the "transfer electrostatic process."

The heart of the selenium-based systems is an aluminum plate, or substrate, coated with a thin film of amorphous selenium. In automatic systems, the plate is in the shape of a cylinder, or drum. The extremely thin layer of selenium is a photoconductor, that is, its electrical conductivity changes

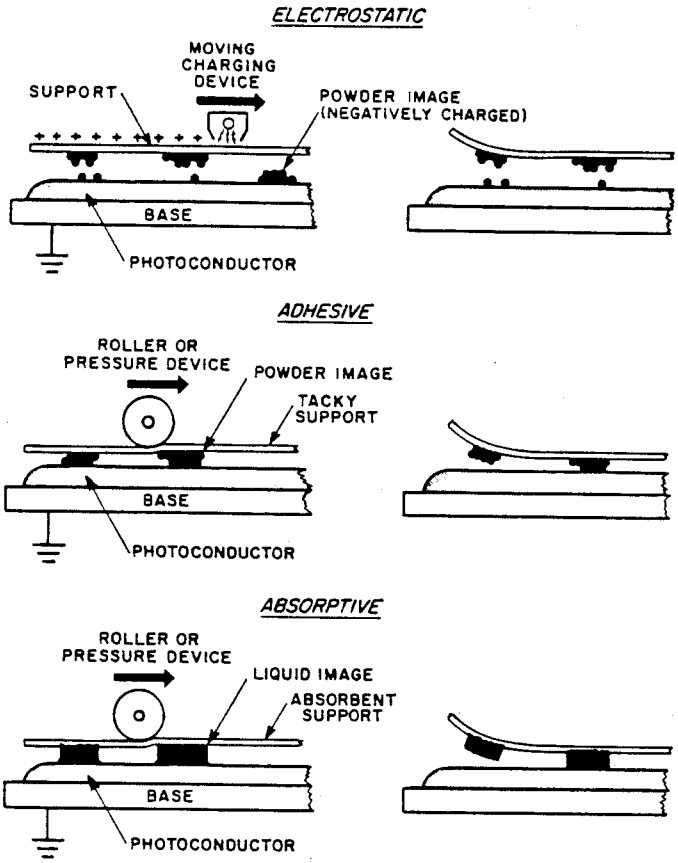

Fig. 2. Image-transfer techniques. For electrostatic transfer, the paper is given a charge opposite in polarity to that of the toner which makes the image on the photoconductor. The image is thus attracted or transferred to the copy paper. In the adhesive method, the paper to which the image is to be transferred is coated with a sticky substance to which the toner adheres. In the absorptive technique, the image on the photoconductor is liquid and when contacted by the paper, the liquid will then be absorbed directly into the copy paper.

when it is subjected to light. The glass-like selenium layer also accepts an electrostatic charge. If kept in darkness, the layer retains that charge long enough to be put to use. However, if exposed to light, the charge dissipates (leaks through the selenium layer to the aluminum substrate) quite rapidly. If only a portion of the selenium is exposed to light, the charge dissipates only in that area and the unexposed part retains the charge, in other words, the amount of lateral dispersion of the charge is entirely insignificant.

The Five Basic Steps

There are five basic steps in the xerographic process. The plates are *charged*, *exposed*, and *developed*. At the end of the developing step there is a powder image on the plate. This image is then *transferred* to paper and *fused*. As a final measure the plate is cleaned. Let us examine each step in turn (Fig. 1).

The selenium is *charged* by passing a wire held at high potential over its surface. If the surface is a drum, as in automatic machines, the cylinder is rotated under the wire.

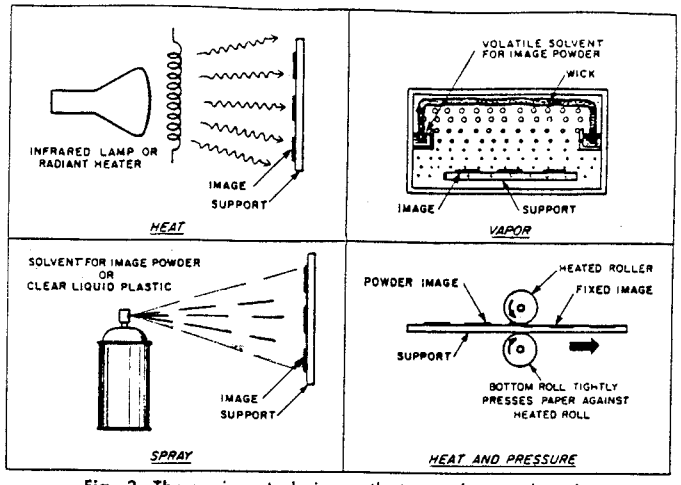

Fig. 3. The various techniques that may be employed to fix the image onto the copy paper. Refer to the text.

The electrical potential on the wire is held high enough so that a corona (glow discharge) is produced and maintained. The plate is literally sprayed with positive or negative ions —the choice of charge depends on the type of document (a negative or a positive) to be copied. In advanced xerographic machines, a system of wires and grids is used to insure that the surface of the selenium receives a uniform charge. Charging must be carried out in darkness.

In the second step, *exposing*, the image to be copied is projected optically to the sensitized plate. When light from the image strikes the sensitized selenium surface, it affects the uniformly distributed charge. Suppose, for example, the original is an ordinary business letter. Those areas of the charged surface which are struck by light rays reflected from the white areas of the document lose most or all of their electrical charge. Light is not reflected from the black areas (the type on the letter) so those areas of the selenium retain their charge. The result is a pattern of electrical charges on the selenium plate which corresponds exactly to the image being exposed. This pattern is called the "latent electrostatic image." A strong electrostatic field is established between the charged and uncharged areas of the selenium plate.

The third step in the process is to *develop* the electrostatic image. This is done by pouring (cascading) a developer over the plate surface. The developer is a granular material made up of two components: small glass or sand beads called "carrier" and a black powder called "toner." It is in the developer that the basic principles of static electricity are employed.

The materials for the developer are selected for their triboelectric properties, that is, their ability to induce opposite charges of static electricity in each other when they are rubbed together. Having opposite charges, the carrier

The xerographic process relies upon the deposition of electric charges on a selenium surface. These charges are generated by a corona discharge in air. The quadrupole mass spectrometer shown here is used to analyze ionization in corona discharge.

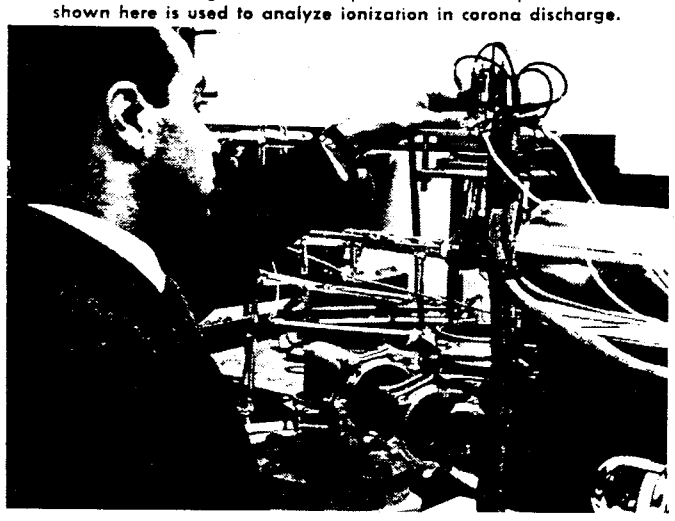

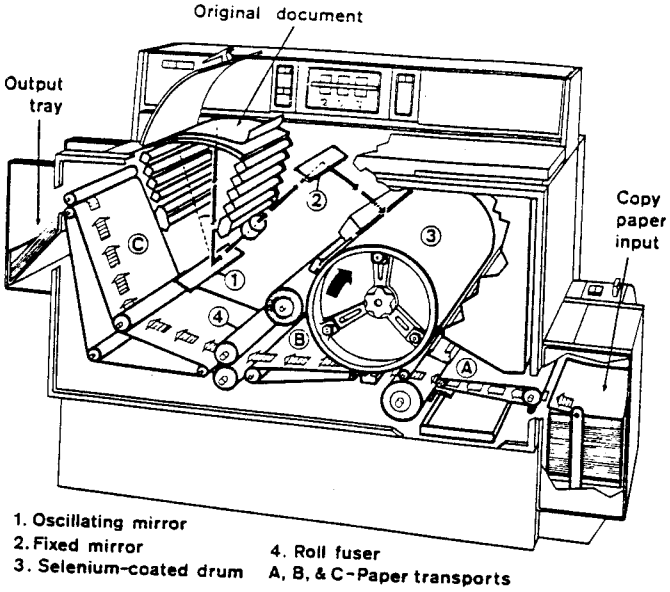

Fig. 4. The operating principles of the 2400.

beads and toner adhere to each other. The charge on the toner is opposite to that which forms the latent electrostatic image on the plate.

As the developer cascades over the selenium plate containing the latent electrostatic image, some of the toner is dislodged from the carrier beads by a combination of mechanical and electrical forces. It is captured by the electrostatic field between charged and uncharged areas, and collects on the charged portions of the image area. This black toner forms a visible, but reverse-reading, image on the plate.

The next step in the copying process consists of *transferring* this toner image from the surface of the plate to a piece of paper (or to almost any other material). This is done by placing the paper over the image area, then charging the back of the paper with an electrical charge and bringing it in contact with the selenium surface. The toner is thus attracted and transferred from the plate surface to the paper.

We now have a right-reading image on paper, but the process is not yet complete. The toner is only lightly attracted to the paper and can be brushed off easily. It must be fixed. This can be done by *fusing*, that is, heating the paper and toner so that the toner particles melt and bond to the paper. The image is now permanent.

Finally, the last procedure, cleaning, is not a part of the xerographic copying process but is necessary so that the selenium plate can be used again to make more copies. There is a faint residue of toner called a *residual image* left on the selenium surface after the transfer step and it must be removed, usually by wiping with a soft brush, before the selenium can be re-used.

We have described a basic xerographic process, but there are many variations on each step of the process. For example, a corona discharge is not the only way to sensitize a plate. It can be charged by a radioactive source or by a conductive rubber roller. The plate can be exposed by contact, by reflection, by projection—or even by x-ray. The latent image can be developed by aerosols or by powder clouds, by liquid sprays or by immersion in a liquid. The image can be transferred electrostatically, as described, or by using an adhesive or absorptive transferring system (Fig. 2). Finally, the images can be fused chemically, by heat, by high-pressure rollers, or a thin plastic coat can be sprayed over the image area (Fig. 3). In the zinc oxide and similar systems, the two steps of transferring and cleaning up are unnecessary; the image is fixed directly on the photosensitive paper.

The Early Machines

After *Xerox* acquired the patent rights to xerography, the company set out to develop an office copier. The first commercial machine was announced in 1950. It was a manually operated machine consisting of several pieces. It had a corona device for charging a flat selenium-covered plate, a contact box with an optical system for exposing the plate to the image to be copied, a tray for cascade development, and an oven for heat-fixing the image. Each step was carried out separately and a good operator could make a copy in about two or three minutes. The company soon saw that it would have to speed up the process, automate it, and reduce the size of the equipment.

The process was automated and the speed increased by replacing the flat plate with a drum. The several process steps (charging, exposing, etc.) were arranged at locations about the periphery of the drum so that each process step could be carried out sequentially, but on different parts of the copy simultaneously. For example, while one part of the drum is being exposed, another part is being developed, the image is being transferred from another part, and the drum is being cleaned in still another part.

Reducing the size of the equipment was another matter. The first automatic machines were rather large and heavy—certainly not desk-top copiers.

In 1956, the company was firmly convinced that size was not the major consideration. What was important was the performance of the equipment, the ease and speed of obtaining copies, and copy quality. Hence, instead of concentrating on a small copier that could be built at a cost competitive with other desk-top copiers, it built versatility and long-run economy into a larger machine and concentrated on selling a copy service. This machine, developed and introduced in 1960, was called the 914 Copier (because the maximum copy size that the machine could handle was 9″ x 14″).

A Desk-Top Copier

Attention was next turned to the design of a true desk-top copier. The engineering plan called for a miniaturized version of 914. At first, the problems involved in shrinking the mechanisms of the 914 to about 1/7th of the size seemed almost insurmountable.

For example, over 1200 parts (not including nuts and bolts) had to be shrunk. The diameter of the drum had to be reduced from 8 inches to about 4¾ inches. The size and design of the drum cleaning system presented a problem in shrinking it down to size. An entirely new cleaning system using a new, soft, non-woven fabric was designed. Internal heat also became a design problem. The moving parts had to be much closer to the heating unit which fuses the toner. This meant that a new air-circulating system had to be designed to remove the heat, a system which would allow uniform fusing but would not disturb loose paper near the machine or make objectionable noise. These particular problems along with a good many others were solved and the 813 Copier was then

A new transistorized circuit for a data display simulator is shown here being checked out in the company's laboratories.

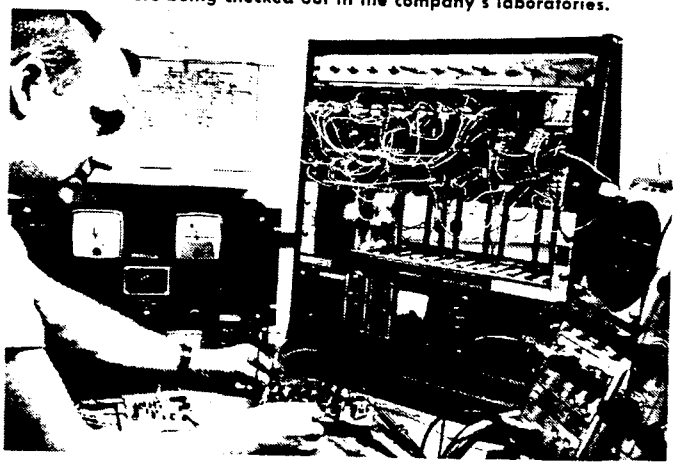

put on the market near the end of 1963.

High-Speed Reproductive System

The distinction between office copying and duplicating has always been that the duplicating process requires the preparation of an intermediate copy or master and copiers do not. For long runs, the cost per copy with duplicators is generally less than with copiers. In practice, duplicators are sometimes used to produce 5 or 6 copies (a costly operation) and office copiers are often used to run off copies by the hundreds.

The gap between copiers and duplicators was bridged last fall with the introduction of the *Xerox* 2400. Copies are made with this unit at the rate of 2,400 per hour directly from the original document.

The original document is put on a curved glass platen and illuminated from below by a bank of specially developed fluorescent lights (Fig. 4). The document is then scanned by an optical system using a newly developed oscillating mirror. The image is reflected through a lens to a fixed mirror which, in turn, reflects each image onto a selenium-coated drum. The xerographic image is developed and transferred to the paper. It is then fixed permanently on the paper by a new method called "heated roll fusing."

To achieve speed, new developments were necessary in the optical, developing, and fusing systems. In addition, drum speed had to be increased. The document image is placed sideways on each third of the drum instead of the single image lengthwise on the whole drum. In the new fast-fusing process, the paper is squeezed between two rolls, one heated.

Search for New Products

Xerography can be used with just about any electronic system where the electrical signal can be converted to light. It has, as a matter of fact, been used to produce documents from the outputs of radar, digital computers, and seismic detectors.

As far back as 1950, there existed the capability to apply the principles of xerography in a system utilizing a cathode-ray tube display to produce an image. However, existing transmission facilities were so limited that further development and applications to a long-range facsimile system were not practical.

In 1961 development began on a system that would overcome the shortcomings of earlier facsimile techniques. A primary objective was to produce a system that would rapidly provide high-quality copies on ordinary paper.

In 1964 the first commercial long-distance xerographic (LDX) facsimile system was installed. This system, using a scanner and electronics, converts the image to be transmitted into two-level video signals for transmission over broadband facilities, such as microwave, special telephone lines, or cable (Fig. 5). On the receiving end, the signals are sent to a cathode-ray tube that projects them optically onto a xerographic drum. Then, they are reproduced by standard xerographic techniques.

A small analog computer is used by engineer to simulate a control system for a copying machine under development. The mathematical model shortens test time and increases confidence in the design of the control system.

Still in the research laboratory is an imaging method which is based on the deformation (selective wrinkling) of a thin film of plastic. Called "frost," the new method is inherently a continuous-tone process. A photoconductor is used to control the formation of an electrostatic image and the selective deformation of a heat-softened film. A light-scattering image is formed which can then be displayed by reflection or transmission optics.

One final application of the principles of xerography should round out our discussion. Xerographic toners are inert to most inorganic and to some organic etching solutions and, therefore, can be used as a chemical resist in the preparation of printed circuits. The technique can also be used to produce microminiature circuits.

These are but a few of the directions the research program has taken. The company intends to continue this emphasis on "directed research and development" and to push forward into new areas of graphic communications. ▲

Fig. 5. Operation of LDX (long-distance xerography) system is shown here.